EXPOLITE

USER MANUAL

Expolite TourCyc 300



TABLE OF CONTENTS

01 Safety Instructions

02 Structure & Installation

03 DMX Signal Connection

04 DMX Addressing

05 Power Connection

06 Control Panel

07 Operation Menu

08 DMX Channel Charts & Channel Priority

09 Maintenance

10 Troubleshooting

11 Technical Data

12 Luminance

13 Dimensions

Every unit is tested completely and packed properly by the manufacturer. Please make sure the packing and/or the unit are in good condition before installation and use. Should there be any damage caused by transportation, consult your dealer and do not use the unit. Any damage caused by improper use will not be assumed by the manufacturer and/or dealer.

Please note that as part of our ongoing commitment to continuous product development, specifications are subject to change without notice.

01 SAFETY INSTRUCTIONS

1.1 Safety Instructions

1. When unpacking and before disposing of the carton, check for transportation damage before using the light. Should there be any damage caused by transportation, consult your dealer and do not use the fixture.
2. The fixture is suitable for indoor and outdoor use (IP65).
3. Do not install the fixture directly onto inflammable surfaces.
4. The fixture is only intended for installation, operation and maintenance by qualified personnel.
5. Do not project the beam onto inflammable surfaces – minimum distance 3 meters.
6. Avoid direct exposure to the light from the lamp. The light is harmful to the eye.
7. Do not attempt to dismantle and/or modify the fixture in any way.
8. Electrical connection must only be carried out by qualified personnel.
9. Before installation, ensure that the voltage and frequency of the power supply match the power requirements of the fixture.
10. It is essential that each fixture is correctly earthed and that the electrical installation conforms to all relevant standards.
11. Do not connect this device to any type of dimmer apparatus.
12. The fixture should always be installed with a secondary safety fixing, e.g. a safety cord; it should be attached as shown in the "Structure & Installation" section.
13. Shields and lenses shall be replaced if they have become visibly damaged to such an extent that their effectiveness is impaired, for example by cracks or deep scratches.
14. The exterior surface temperature of the luminaire after 5 minutes of operation is approx. 45 °C, up to 70 °C when steady state is achieved.
15. There are no user-serviceable parts inside the fixture. Do not open the housing and never operate the fixture with the covers removed.
16. Always disconnect from power before installation, cleaning and maintenance.
17. If you have any questions, don't hesitate to consult your dealer or the manufacturer.

Note: All products are well packed prior to shipping; please use the fixtures according to this manual. Machine failure due to human causes is not covered by the warranty.

02 STRUCTURE & INSTALLATION

2.1 Structure & Installation

The mounting bracket with half coupler is bolted to the top of the fixture; in addition, a safety cord is attached to the safety eyelet. The fixture can be placed standing on the ground, hung vertically or mounted sideways.

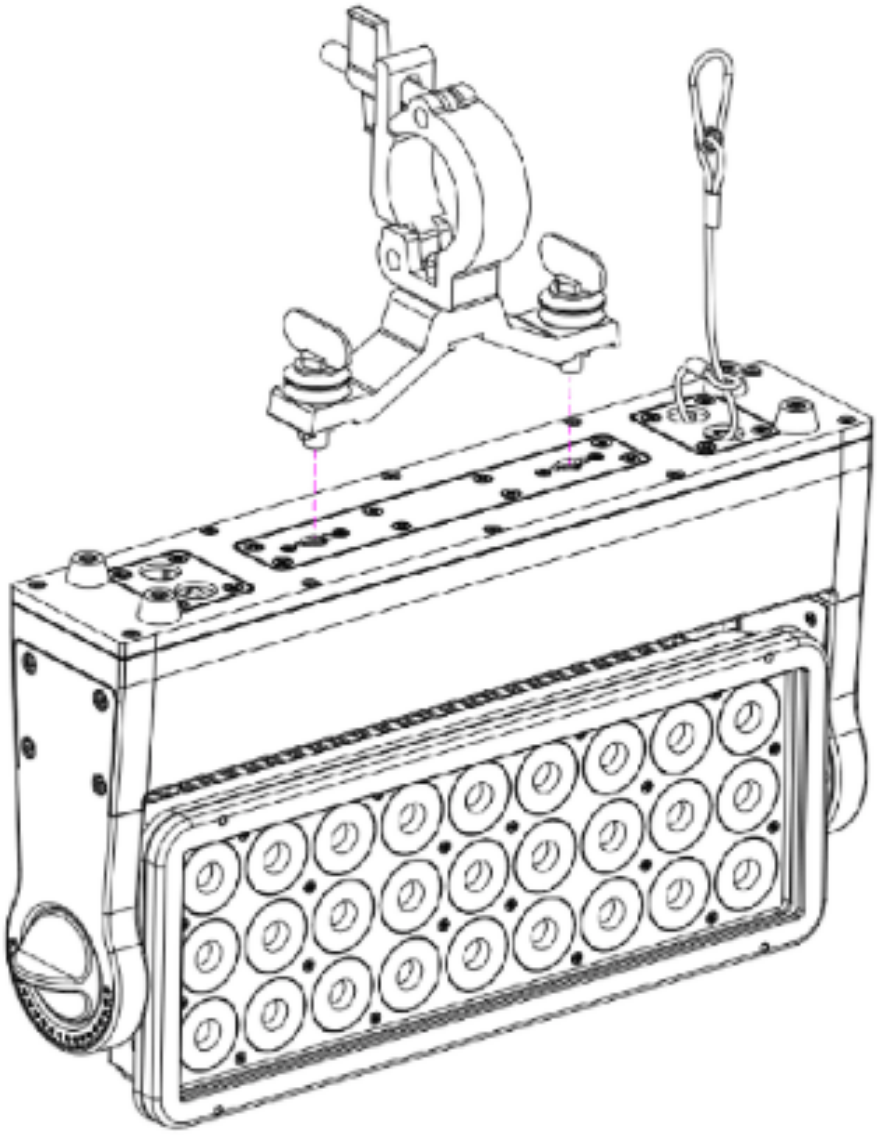

Caution: Always disconnect from power before the device's installation, cleaning and maintenance.

03 DMX SIGNAL CONNECTION

3.1 Signal Cable Connection

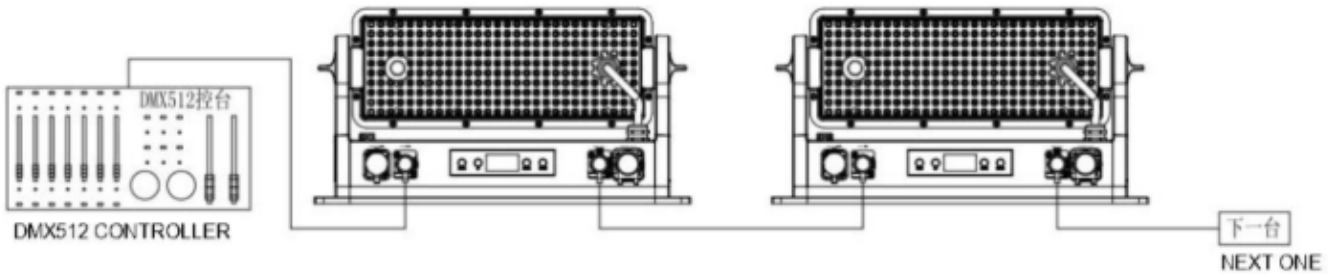

3.2 Signal Connection Instructions



- To reduce signal errors and avoid signal weakening and interference during transmission, a 120 Ω resistor (0.25 W) can be used to link pin 2 and pin 3 of the DMX output terminal of the last fixture (termination).
- Connect the fixtures with XLR signal cables, one by one: DMX INPUT – DMX OUTPUT – DMX INPUT ... and so on.
- The signal cables can only be connected in series, not in parallel.
- Because the DMX512 signal transmission speed is very fast, damaged signal cables, broken solder joints and bad contacts will affect the signal transmission and can lead to a shutdown of the system.
- When the power of some fixtures is disconnected, the DMX output and input are bypassed internally so as to maintain the DMX cable connection.
- Each fixture has an address code to receive signals from the console.
- The end of the DMX512 system needs to be fitted with a terminator to reduce errors in signal transmission.

04 DMX ADDRESSING

4.1 DMX Address Code Setting

Each fixture is assigned its own start address (menu item "DMX Address", 001–512). The start address results from the selected channel mode:

Channels	Address code	1st fixture	2nd fixture	3rd fixture	4th fixture
4CH	001–004	001	005	009	013
7CH	001–007	001	008	015	022
8CH	001–008	001	009	017	025

Note: From the 4th fixture onwards, the address code continues according to the DMX channel mode, and so on (see table).

05 POWER CONNECTION

5.1 Power Connection

The fixture features waterproof Power In/Out connectors. Connect the power cords hand in hand (daisy chain, unit to unit).

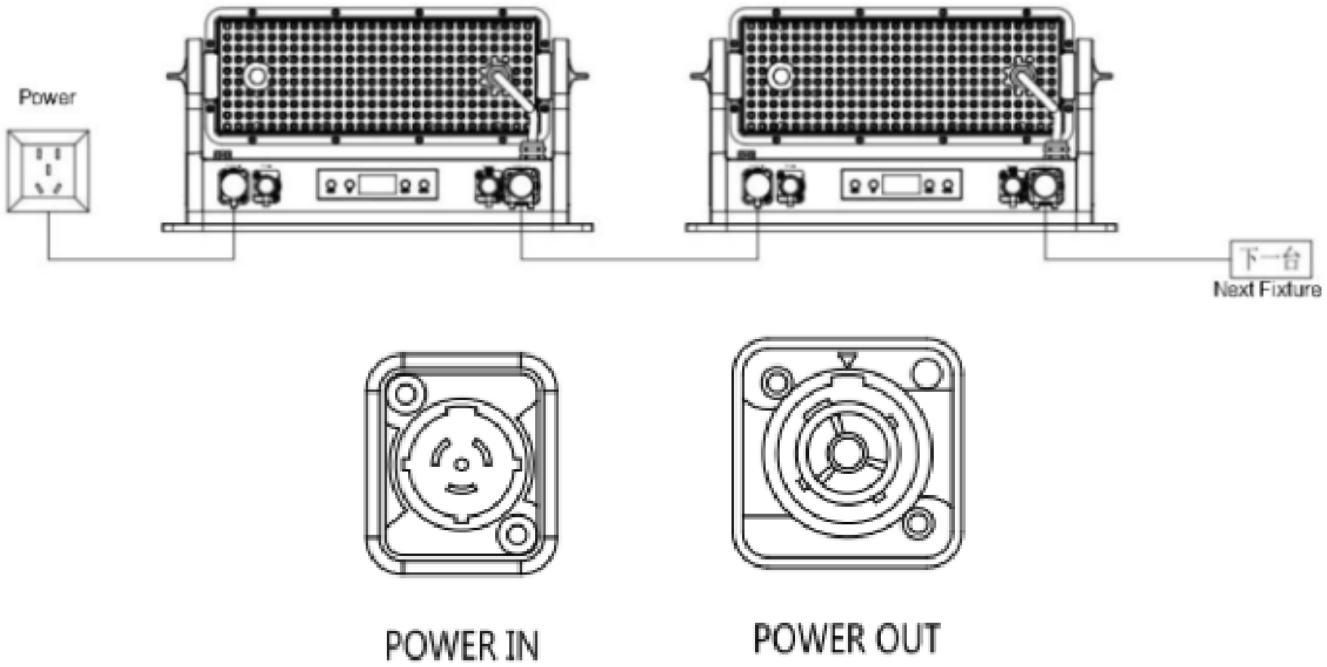

Attention: Due to power limits, one 1.5 mm² power cable can connect not more than 6 units (at 230 V).

CAUTIONS

- Do not connect too many fixtures or overload through a single power cord.
- Do not use power cords with damaged insulation, and do not put the power cord on other wires.
- Unplug the power cord when the fixture is not in use or being cleaned.
- Do not vigorously unplug or drag the power cord directly.

06 CONTROL PANEL

6.1 Control Panel

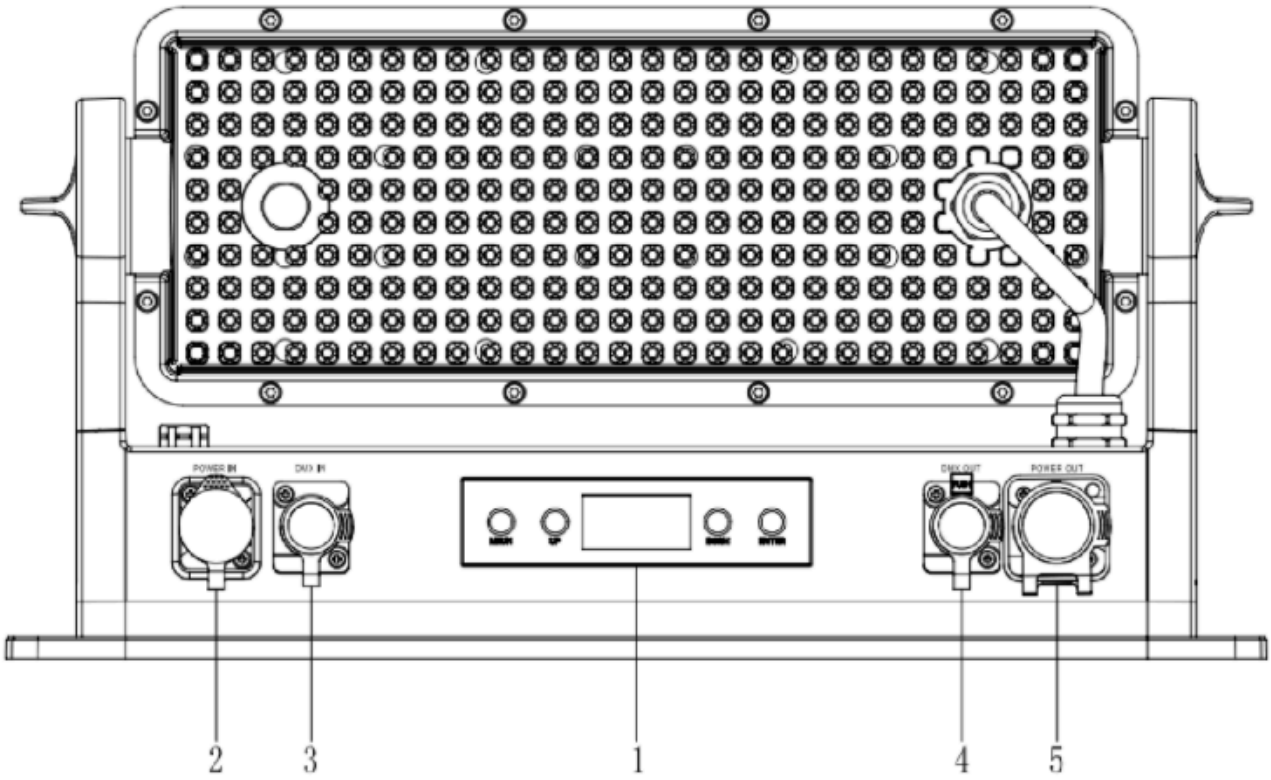

1. **Panel operation buttons:** MENU, UP, DOWN, ENTER
2. **Power In:** waterproof power cable input, voltage: 100–240 V, 50/60 Hz
3. **DMX In:** 5-pin DMX waterproof signal cable input
4. **DMX Out:** 5-pin DMX waterproof signal cable output
5. **Power Out:** waterproof power cable output, voltage: 100–240 V, 50/60 Hz

Button	Description	Function
MENU	Menu choosing	Menu operation, return to the upper menu level
UP	Shift to the previous	Increase the parameter
DOWN	Shift to the next	Decrease the parameter
ENTER	Save your settings	Confirm the selected settings

- Press UP or DOWN to browse through the various setup options.
- Press ENTER to save your settings or enter the next menu.
- Press MENU to return to the upper menu level, one by one.

07 OPERATION MENU

7.1 Operation Menu

Note: The password for entering the main menu is "8888".

Level 1	Level 2	Description
DMX Address	001–512 · Cancel / Enter	Set DMX address
DMX Channel Mode	4 / 7 / 8 Channel Mode	Select channel mode
Dimmer Mode	Dimmer Mode 1 / 2 / 3	Select dimmer response
Dimmer Curve	Dimmer Curve 1 / 2 / 3 / 4	Select dimmer curve
LED Frequency	600 Hz / 1200 Hz / 2000 Hz / 4000 Hz / 6000 Hz / 25 kHz	Select PWM frequency
Manual Colour	Red / Green / Blue / Amber, each 0–255	Manual color mixing
Auto Program	Auto Colour / Auto Fade	Built-in auto programs
Language	English / Chinese	Menu language
Display	Normal / Reverse	Flip the display
Backlight	ON / 30S	Backlight permanently on or for 30 s
Password	No / Yes	Password protection
Fixture Test	Red / Green / Blue / White	Color function test
Factory Reset	NO / YES	Load factory defaults
System Info	RDM UID · Version · DMX Channel · Run Time · User Time · Temperature	RDM UID, software version, currently used mode, total usage time, time of use, current operating temperature

Remarks (Master/Slave):

1. Only one fixture can be set to host in one signal cable; remove the DMX control signal when using the host function.
2. In the synchronous control of multiple fixtures, parameters can be transmitted from the master, including: DMX mode, display setting and operation mode (user memory data included). All fixtures accepting parameters will automatically be set to slave mode.

08 DMX CHANNEL CHARTS

8.1 DMX Channel Charts

4-Channel Mode

Channel	Function	DMX value	Effect
1	Red	0–255	0 – 100 %
2	Green	0–255	0 – 100 %
3	Blue	0–255	0 – 100 %
4	White	0–255	0 – 100 %

7-Channel Mode

Channel	Function	DMX value	Effect
1	Dimmer	0–255	0 – 100 %
2	Strobe	0–255	0 – 100 %
3	Red	0–255	0 – 100 %
4	Green	0–255	0 – 100 %
5	Blue	0–255	0 – 100 %
6	White	0–255	0 – 100 %
7	Colour Temperature	0–255	0 – 100 %

8-Channel Mode

Channel	Function	DMX value	Effect
1	Dimmer	0–255	0 – 100 %
2	Strobe	0–255	0 – 100 %
3	Red	0–255	0 – 100 %
4	Green	0–255	0 – 100 %
5	Blue	0–255	0 – 100 %
6	White	0–255	0 – 100 %
7	Colour Temperature	0–255	0 – 100 %
8	Colour Macro	0–255	0 – 100 %

Note (channel 7 – Colour Temperature): At DMX value 1–4 (0.4 – 1.6 %) the default DMX value applies; RGBW remains controllable.

8.2 Channel Priority

Dimming > built-in program call > user program call > ARGBW dimming > HSV dimming > macro instruction > color temperature

09 MAINTENANCE

9.1 Maintenance

- To ensure the reliability of the fixture it should be kept clean. It is recommended that the cooling surfaces be cleaned every 15 days.
- The lens and dichroic color filters should also be regularly cleaned to maintain an optimum light output. Do NOT use any type of solvent on dichroic color filters.
- Cleaning frequency depends on the environment in which the fixture operates: damp, smoke or particularly dirty surroundings can cause greater accumulation of dirt on the unit's optics. A soft cloth and typical glass cleaning products should be used for cleaning.
- It is recommended to clean the external optics at least once every 20 days and the internal optics at least once every 30 – 60 days.
- Do not use any organic solvent (e.g. alcohol) to clean the reflector mirror, dichroic color filters or housing of the apparatus.

10 TROUBLESHOOTING

10.1 Troubleshooting

Problem	Action
The fixture won't switch on properly	Check the power cord connection · Switching power supply damaged or connection faulty – maintenance and repair by professional qualified technicians only · Control board connection faulty – maintenance and repair by professional qualified technicians only
The fixture switches on, but the LED is not bright and not controlled	LED board connection faulty – maintenance and repair by professional qualified technicians only
Switches on and lights normally, but is not controlled by the controller	Check that the DMX starting address is set correctly · Check the XLR signal line for damage
The fixture is dim and the brightness drops sharply	The fixture's temperature is too high – take necessary ventilation and heat dissipation measures

11 TECHNICAL DATA

11.1 Technical Parameters

Optics	
Light source	270 W RGBW LED
Luminous flux	15,000 lm (20°)
Color temperature	2400 K – 8000 K
CRI	Ra ≥ 80
Beam angle	20°
Frost filter	45° / 80°
Dynamic effects	
Tilt	Manual rotation of 180°
Color system	RGBW mix
Pixel matrix	Integral control
Strobe	0 – 20 Hz
Dimmer	3 dimmer curves, 0 – 100 % dimming
Power	
Voltage & frequency	100 – 240 V AC, 50 – 60 Hz
Power connection	Seetronic IP65 PowerCon input/output, ≤ 6 sets in series @ 230 V
Signal connection	Seetronic IP65 XLR 5-pin input/output, ≤ 32 in series
Power rating	280 W @ 230 V
Power factor	0.95 / 230 V
Working environment	−20 to +45 °C
Structure	
Size	Product: 454 × 250 × 80 mm · Package: 538 × 320 × 180 mm
Weight	N.W. 6.7 kg · G.W. 7.62 kg
Protection grade	IP65
Heat dissipation	Natural heat dissipation
Housing	Die-cast aluminum, black
Installation	Standing on the ground, vertical hanging, side hanging
Control	
Control mode	DMX512 / Wired RDM / W-DMX
DMX channels	4CH / 7CH / 8CH
Display	OLED display with 4 touch buttons
Refresh rate	600 / 1200 / 2000 / 4000 / 6000 Hz / 25 kHz
Accessories	
Standard	1× EU IP65 power cord · 1× manual
Optional	Frost filter set (45° / 80°)

12 LUMINANCE

12.1 Luminance List (full on, values in lux)

Beam angle 20°

Color	5 m	10 m
Red	2,300	630
Green	4,350	1,130
Blue	970	277
White	7,500	2,033
All	13,100	3,360

With frost filter 45°

Color	5 m	10 m
Red	505	126
Green	1,148	286
Blue	220	52
White	1,143	363
All	2,916	742

With frost filter 80°

Color	5 m	10 m
Red	110	28
Green	272	68
Blue	50	12
White	311	78
All	640	160

13 DIMENSIONS

13.1 Product Size

Dimensions: 454 × 250 × 80 mm (W × H × D). All dimensions in millimeters.

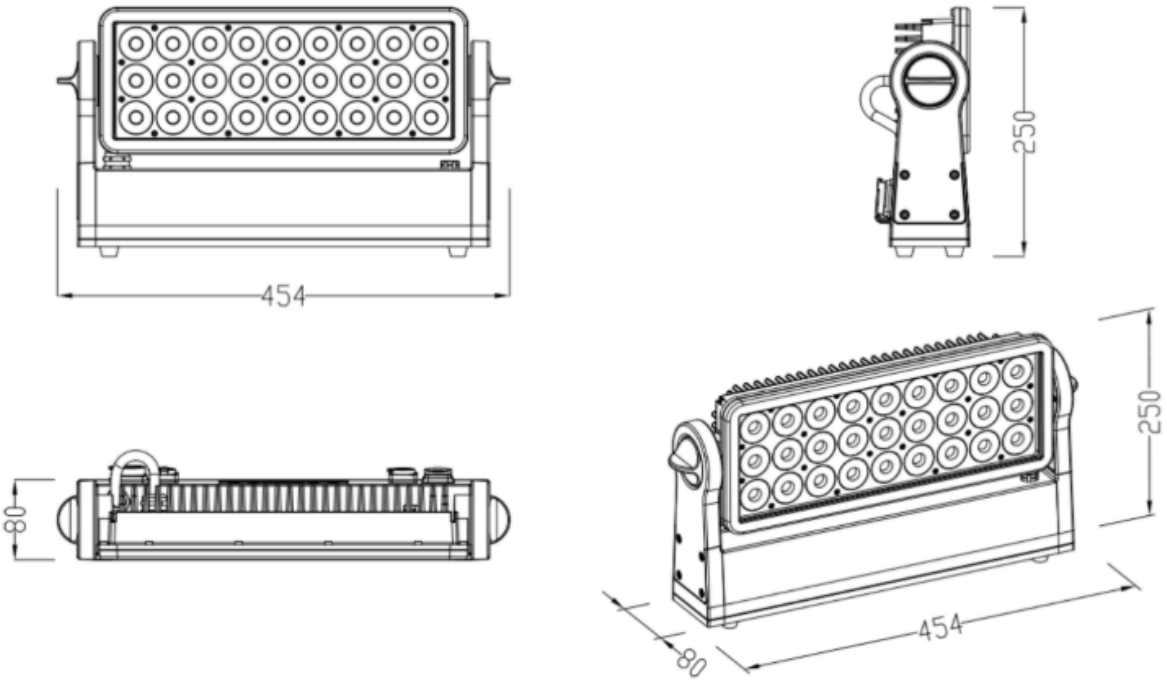

ANY QUESTIONS OR FEEDBACK?

Scan the QR-Code and contact us on our website. We are happy to help!

FOCON Showtechnic | Teichweg 4+6 | 49504 Lotte | +49 (0) 541 / 770 95 - 0 | info@focon-showtechnic.com